R-IN32M4-CL2 Starter Kit Evaluation Board　　Rev1.2

PAGE	SCHEMATIC PAGE TITLE	Rev
1	Table of Contents(This Page)	1.2
2	Block Diagram	1.0
3	CCI-IE / Gigabit Ether	1.2
4	Port (CPU)	1.0
5	Serial Flash / DSW / LED	1.0
6	JTAG / Reset / Mode Select	1.2
7	Power (CPU)	1.0
8	PMIC / USB-UART	1.0

Revision History

DATE	Rev	Page	DESCRIPTION
2015.08.28	1.0		Rev 1.0リリース
2015.09.16	1.1	6	●RESETZ期間変更 C46定数変更:0.1u/25V/1005/B(未実装)→0.01u/50V/1005/B(実装)
2015.12.03	1.2	3	●RJ45 FG接続変更 ・R4実装変更:0ohm/3226(未実装) → 0ohm/3226(実装) ・C32部品変更:1000p/2000V/3225/X7R → 0ohm/3226
		6	●TRACE部 抵抗変更 ・R24部品変更:33ohm/1005/5% → 150ohm/1005/5% ・RA3部品変更:CN1E4KTTD330J → CN1E4KTTD151J

注意事項

*指定無きRの精度は全て1%
*部品詳細については部品表にて確認
*印はGNDガード　*印は等長配線　*印はインピーダンス指定
*印は未実装

220 Parts, 25 Library Parts, 168 Nets, 957 Pins

Table of Contents

Title: R-IN32M4-CL2 Starter Kit Evaluation Board

Size: A3 | Document Number: 250921001 | Rev: 1.2

Date: Thursday, December 03, 2015 | Sheet 1 of 8

Block Diagram

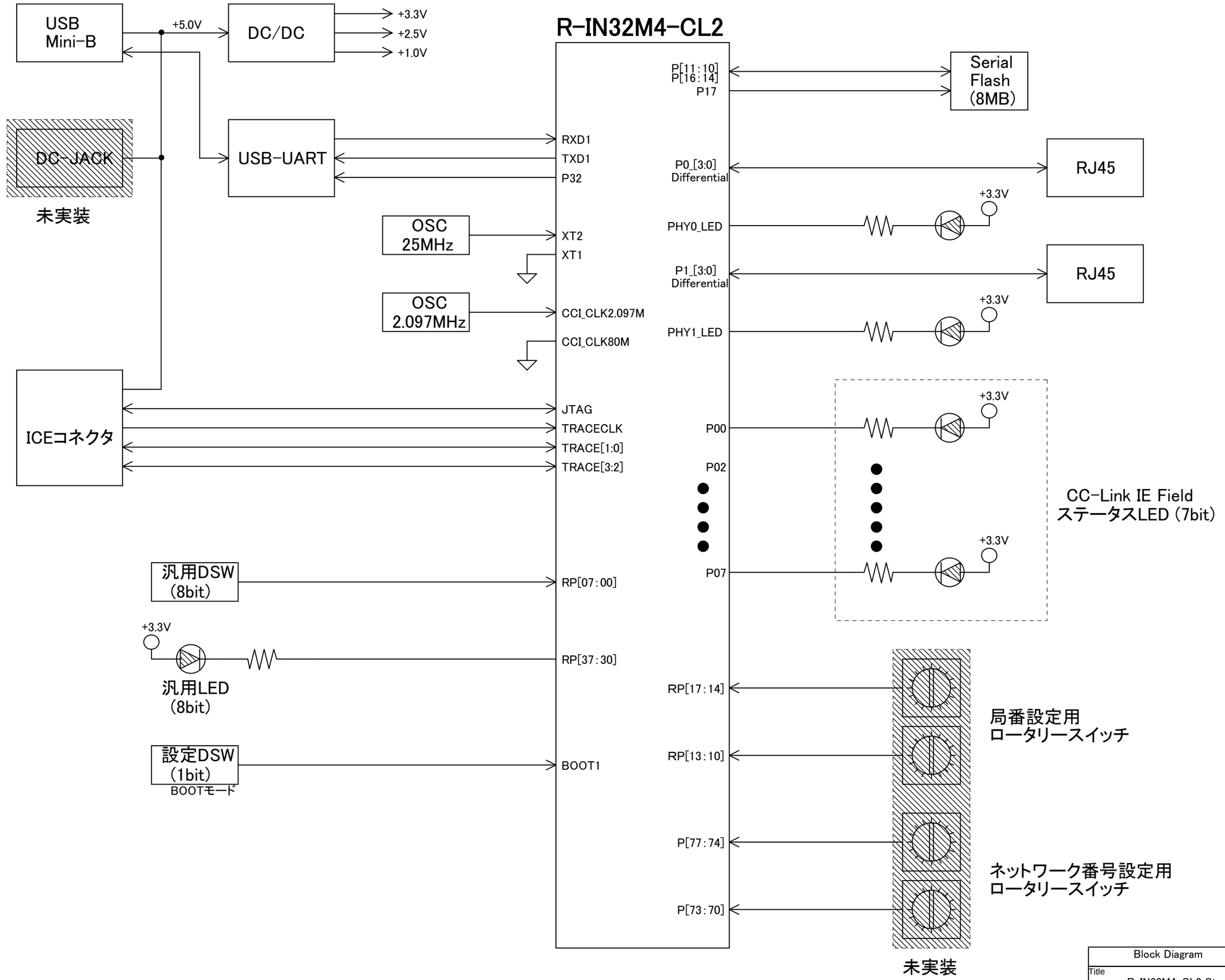

Block Diagram			
Title	R-IN32M4-CL2 Starter Kit Evaluation Board		
Size A3	Document Number 250921001		Rev 1.0
Date: Thursday, December 03, 2015	Sheet 2 of 8		

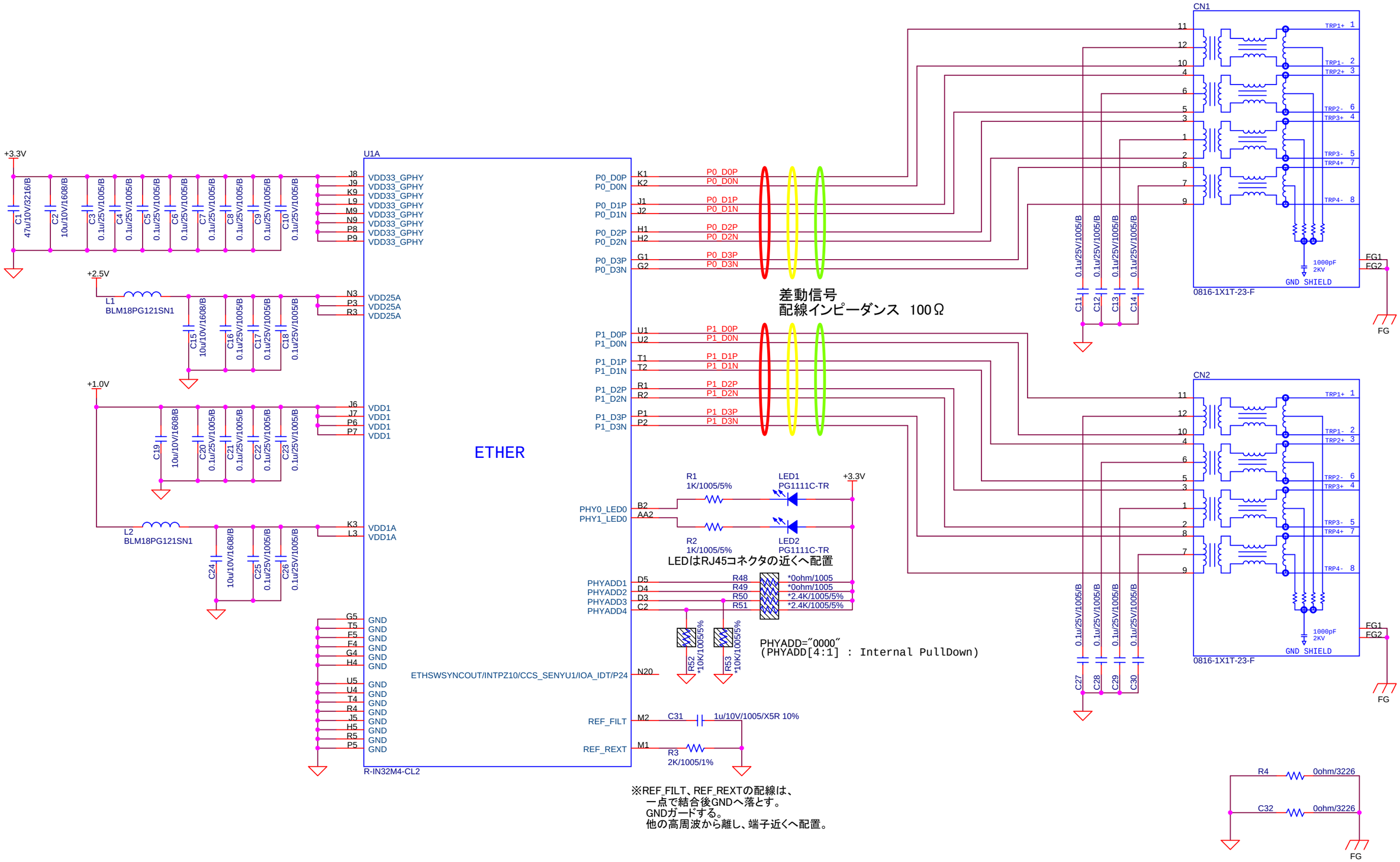

CCI-IE / Gigabit Ether			
Title: R-IN32M4-CL2 Starter Kit Evaluation Board			
Size: A3	Document Number: 250921001		Rev: 1.2
Date: Thursday, December 03, 2015	Sheet 3 of 8		

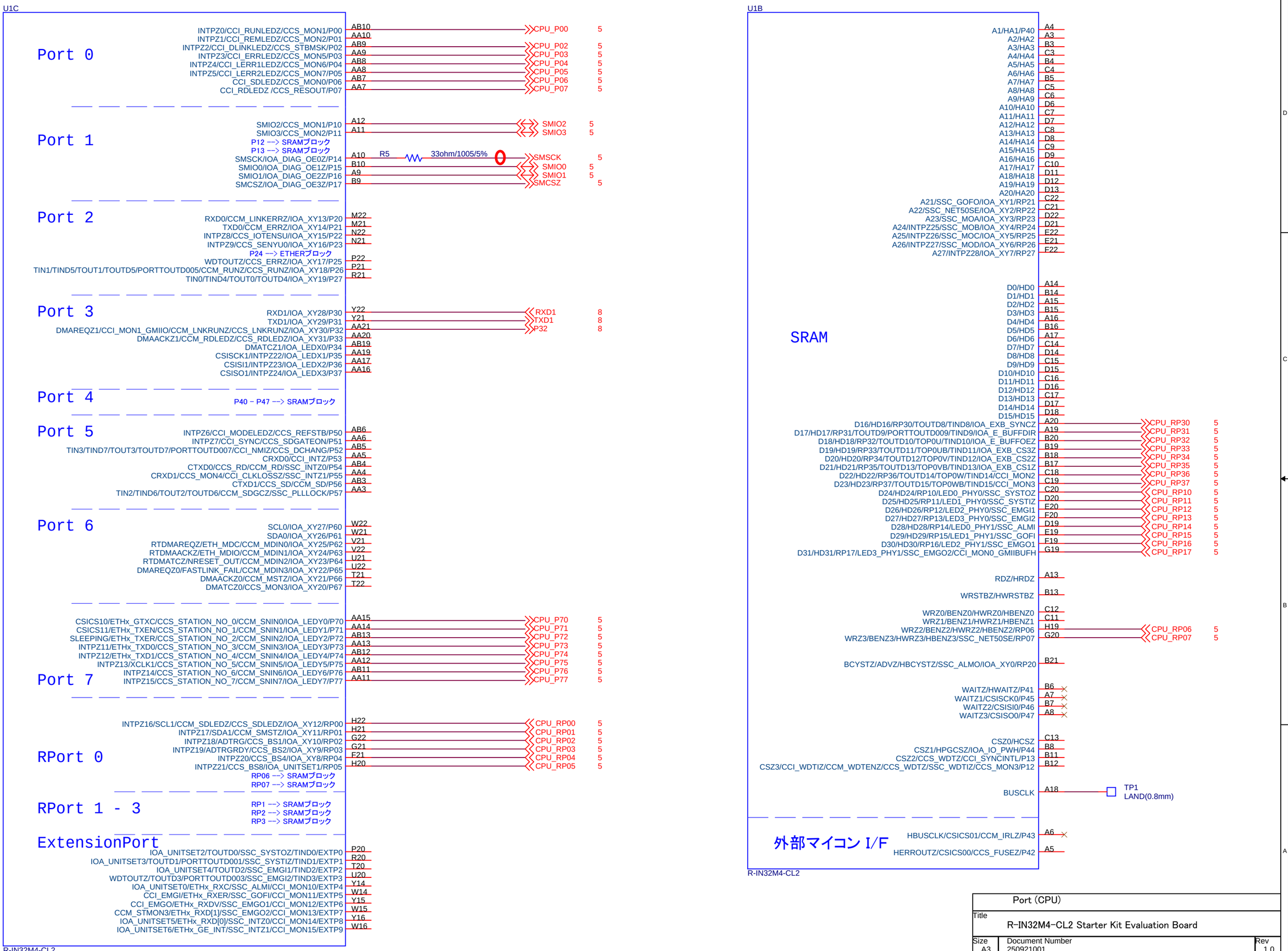

Port (CPU)			
Title	R-IN32M4-CL2 Starter Kit Evaluation Board		
Size A3	Document Number 250921001		Rev 1.0
Date: Thursday, December 03, 2015	Sheet 4 of 8		

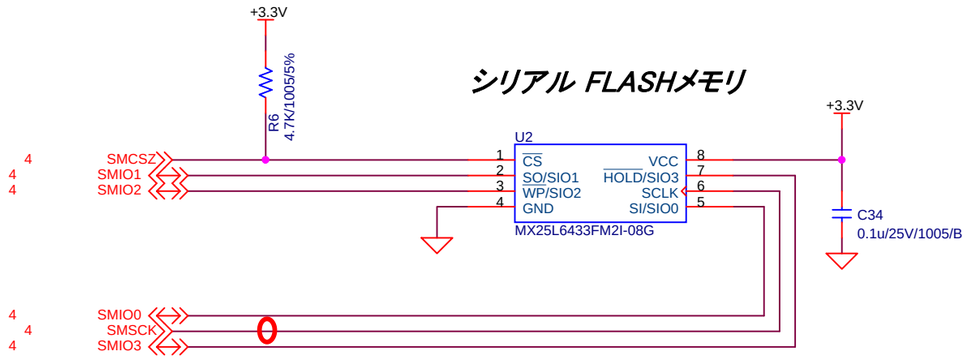

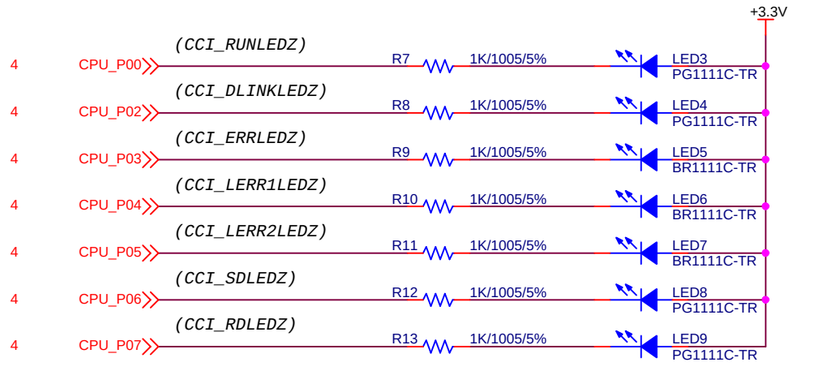

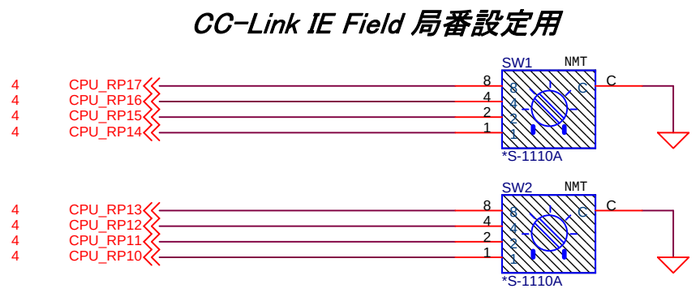

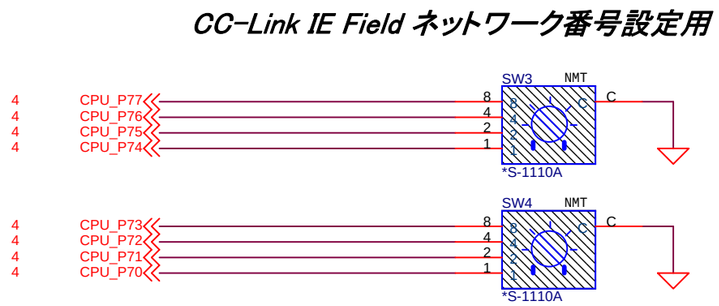

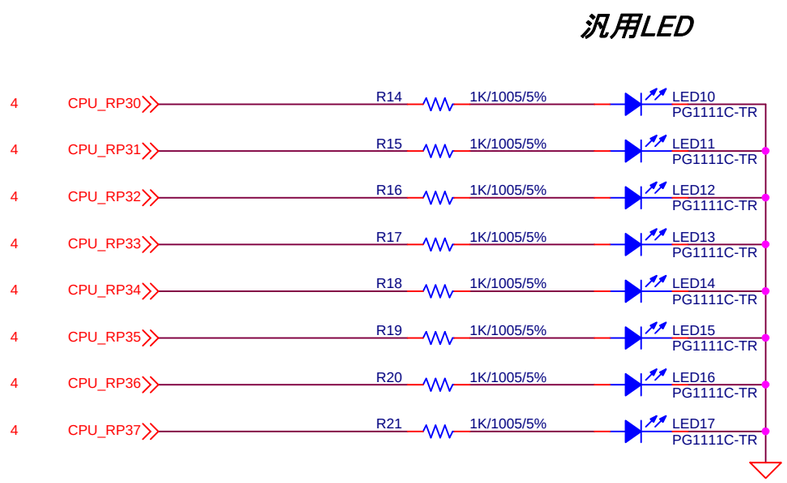

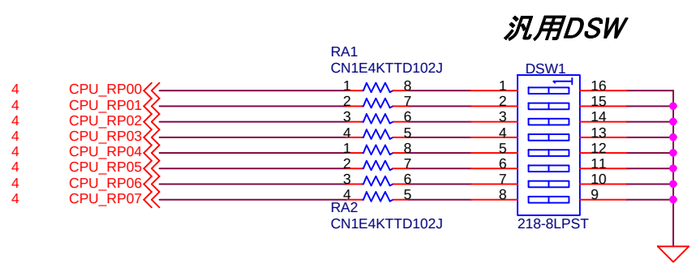

Title	Serial Flash / DSW / LED R-IN32M4-CL2 Starter Kit Evaluation Board	
Size A3	Document Number 250921001	Rev 1.0
Date: Thursday, December 03, 2015	Sheet 5 of 8	

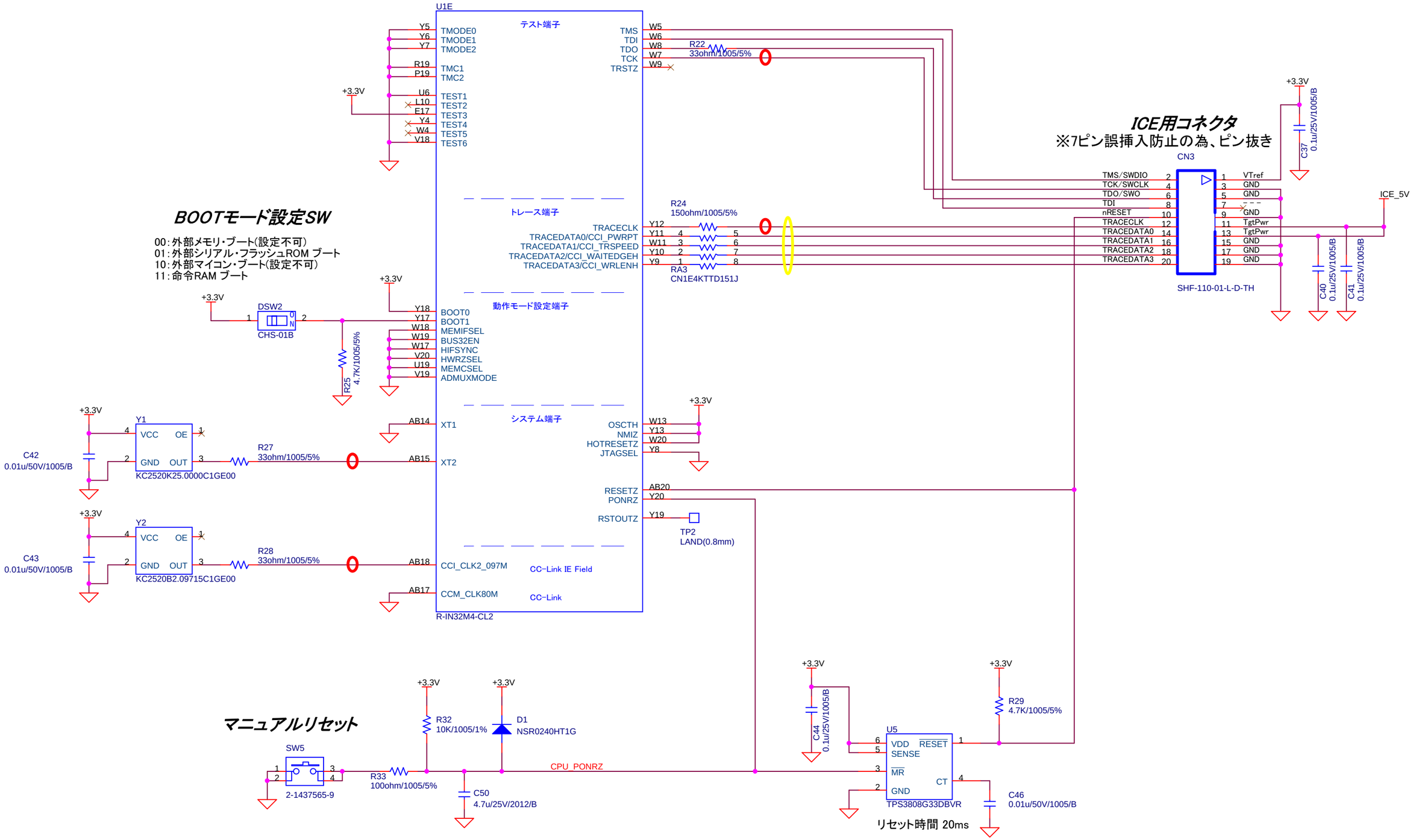

JTAG / Reset / Mode Select		
Title: R-IN32M4-CL2 Starter Kit Evaluation Board		
Size: A3	Document Number: 250921001	Rev: 1.2
Date: Thursday, December 03, 2015	Sheet 6 of 8	

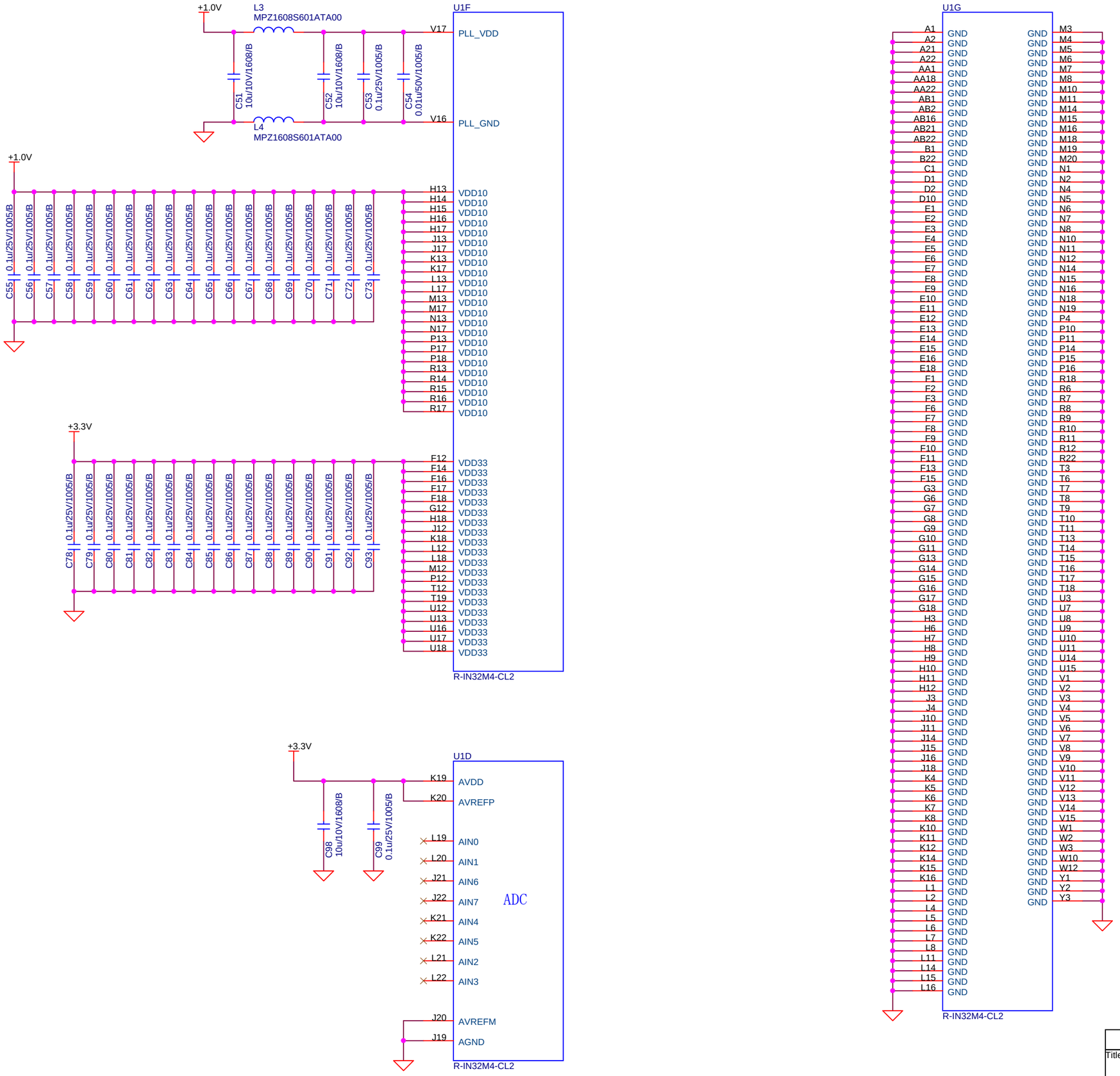

Title	Power (CPU)		
	R-IN32M4-CL2 Starter Kit Evaluation Board		
Size A3	Document Number 250921001		Rev 1.0
Date: Thursday, December 03, 2015	Sheet 7 of 8		

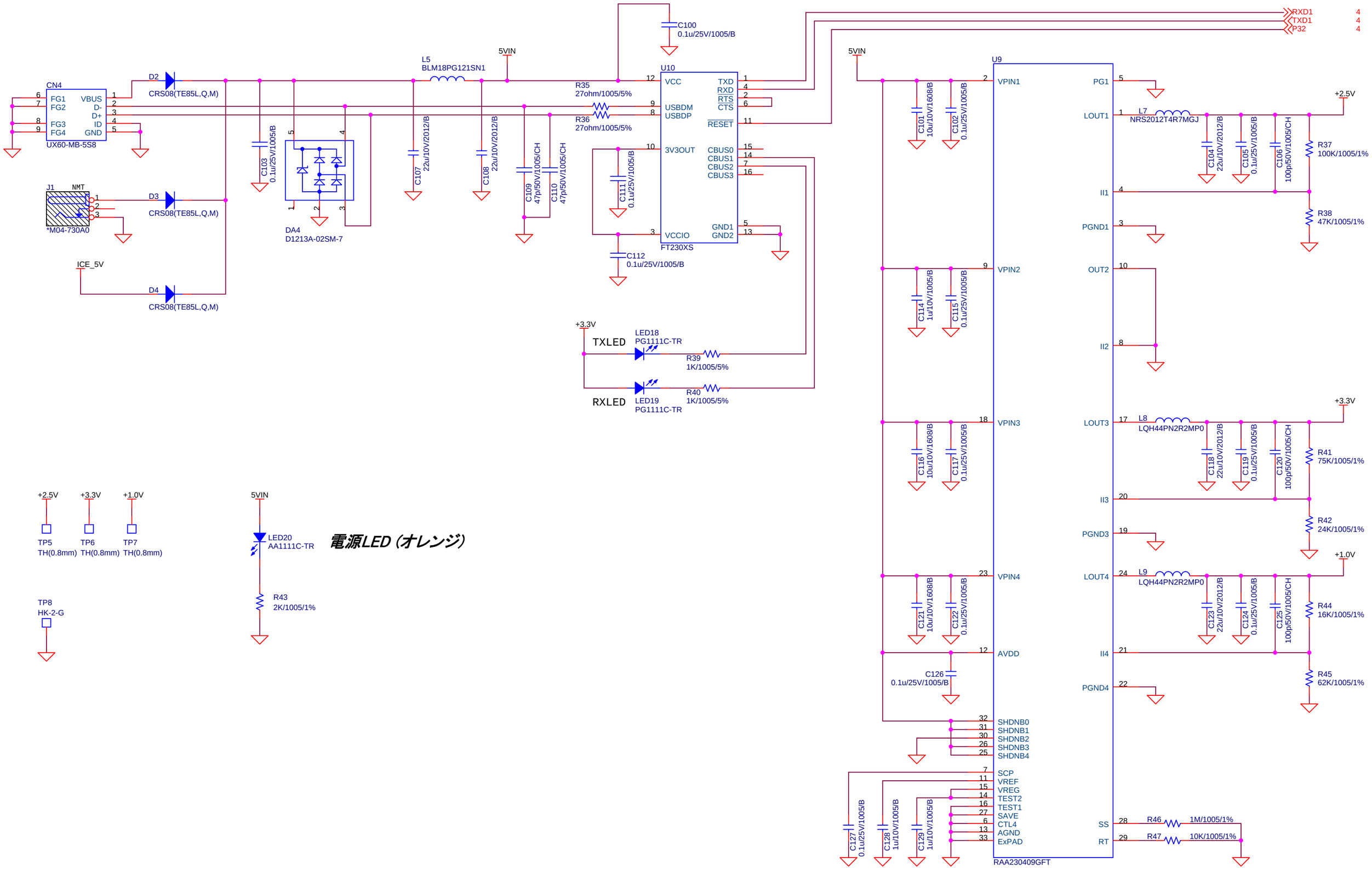

PMIC / USB-UART

Title
R-IN32M4-CL2 Starter Kit Evaluation Board

Size	Document Number	Rev
A3	250921001	1.0

Date: Thursday, December 03, 2015 Sheet 8 of 8